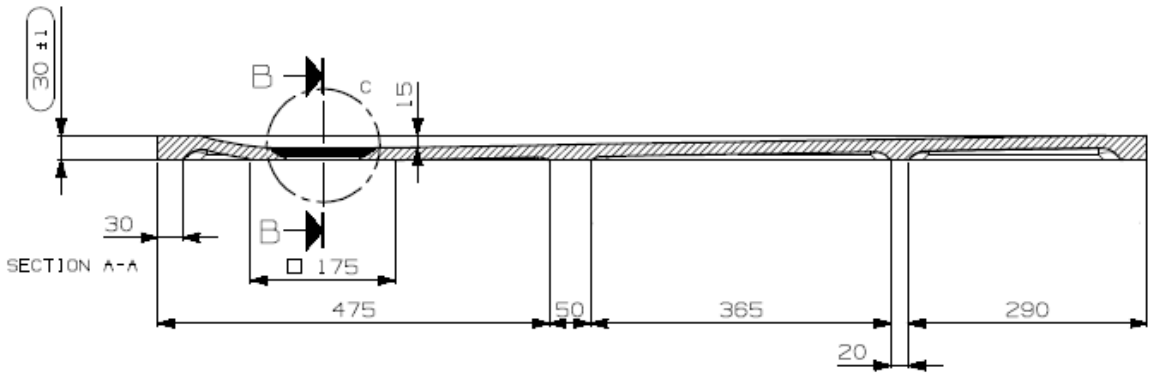

SECTION A-A

SECTION B-B

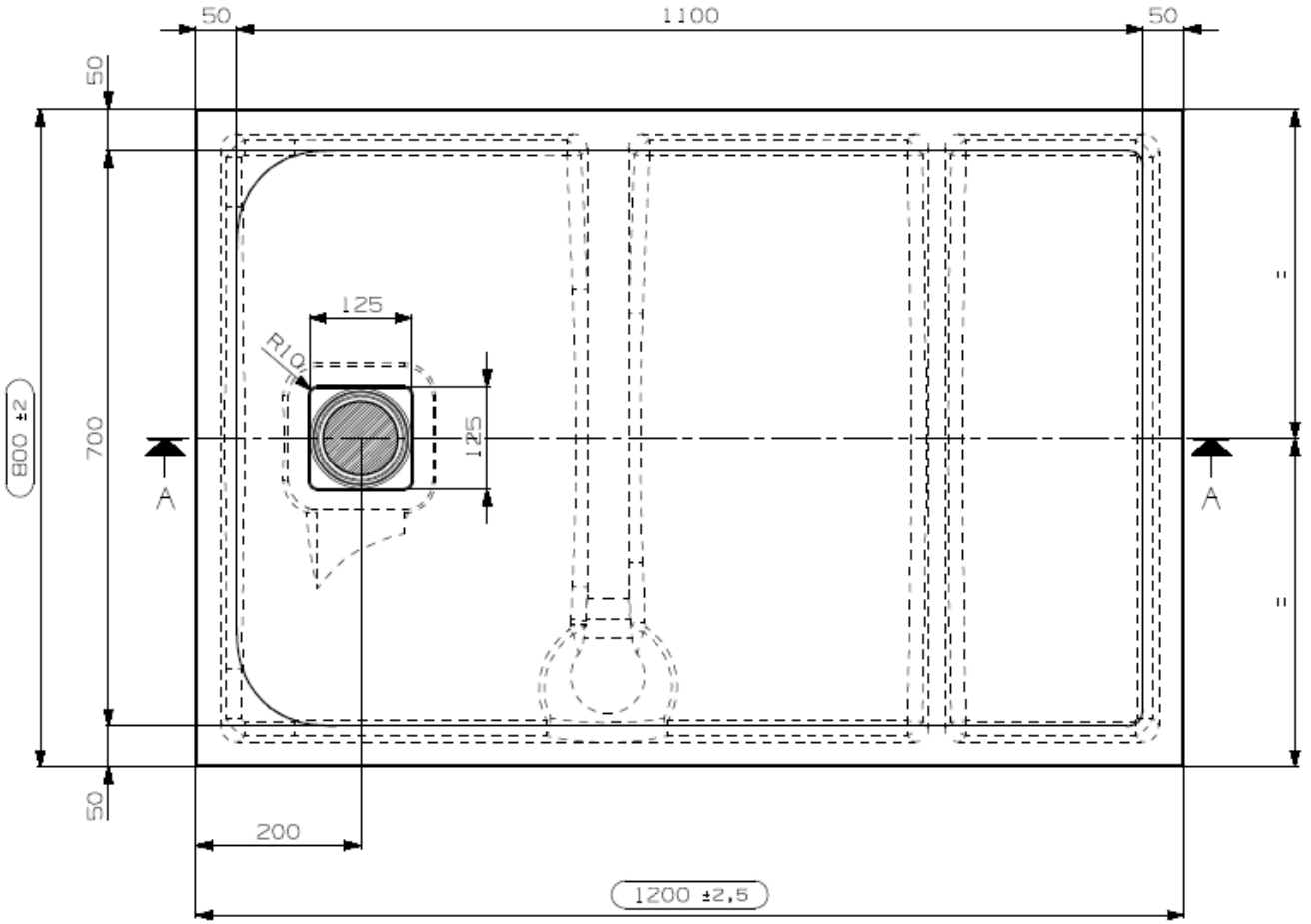

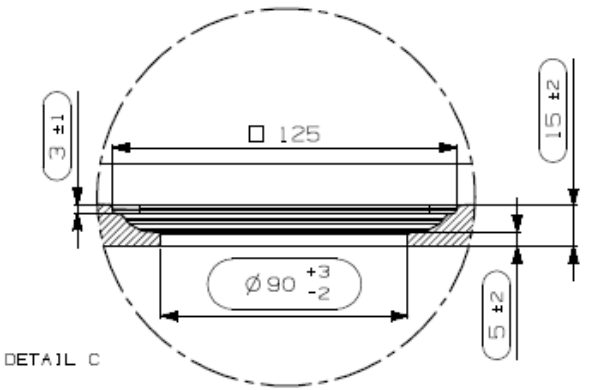

DETAIL C

DOMUS LIVING

DOMUSTONE SHOWER TRAYS
MODEL: PIETRA
SIZE: 800X1200 mm
WEIGHT: 34.5 KG