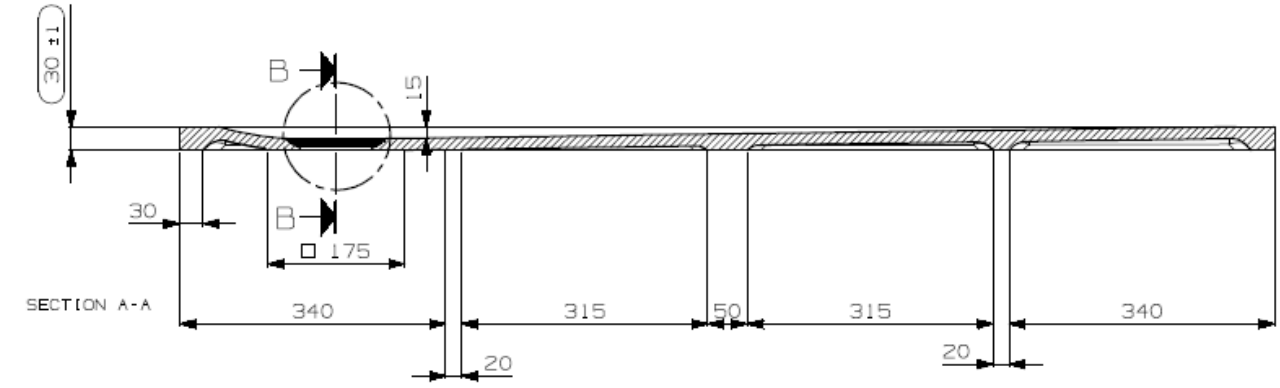

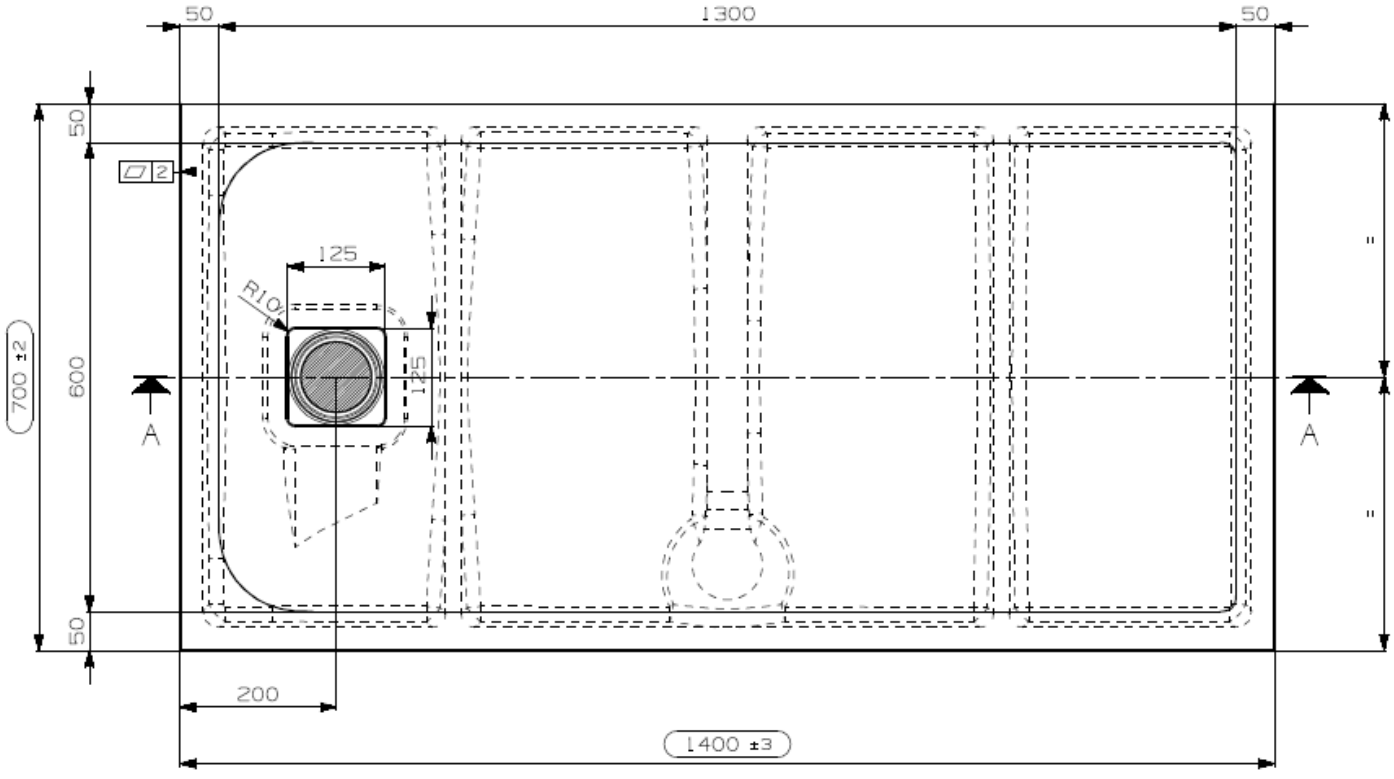

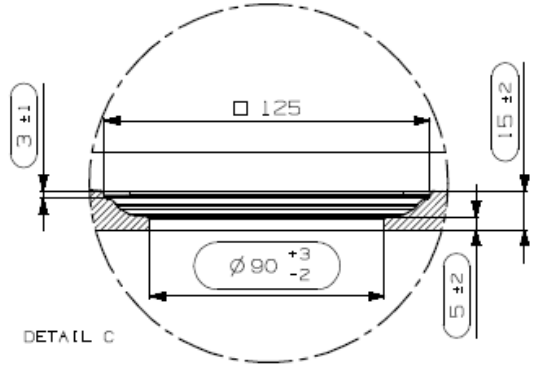

DOMUS LIVING

DOMUSTONE SHOWER TRAYS
MODEL: PIETRA
SIZE: 700x1400 mm
WEIGHT: 35.5 KG