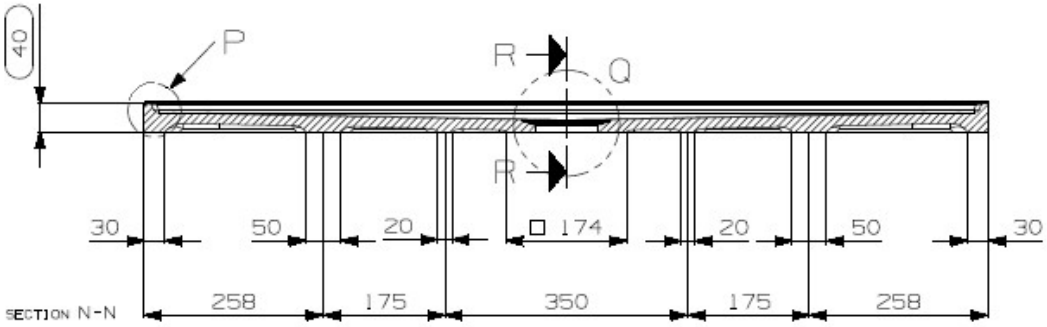

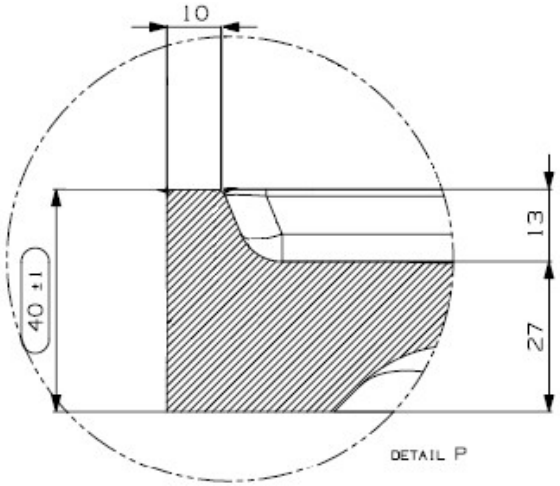

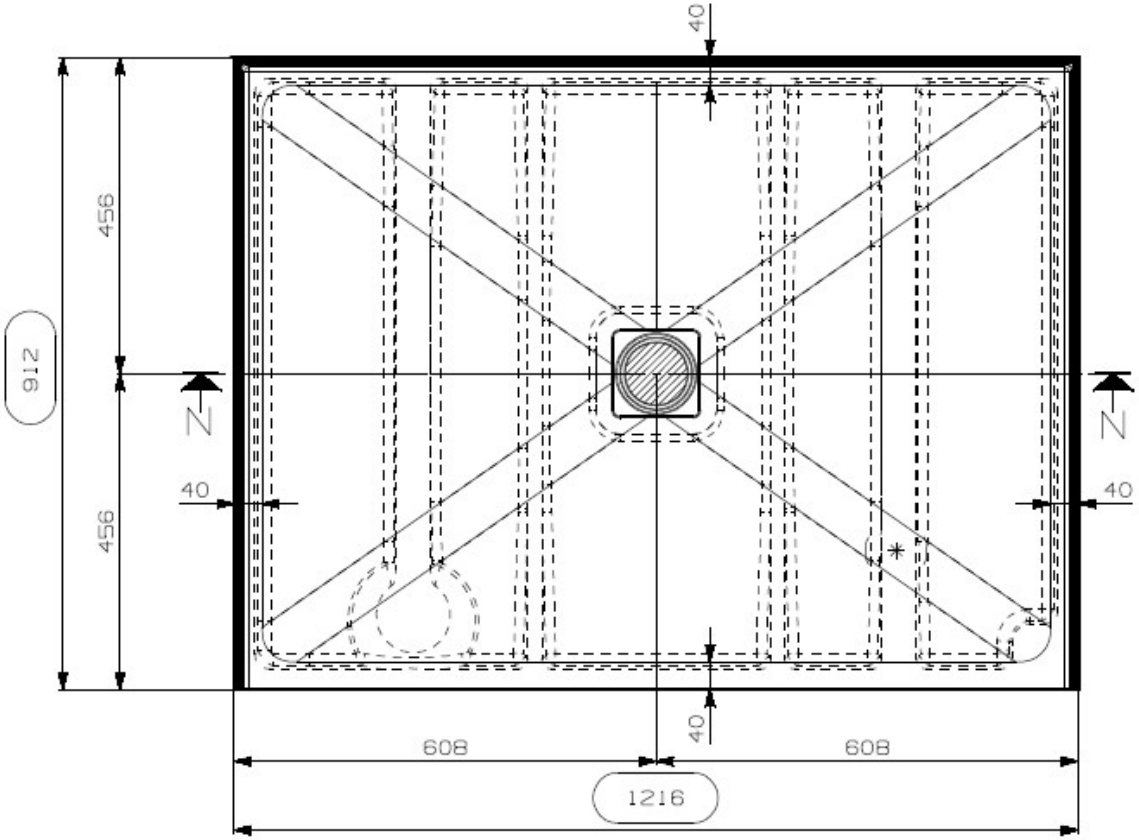

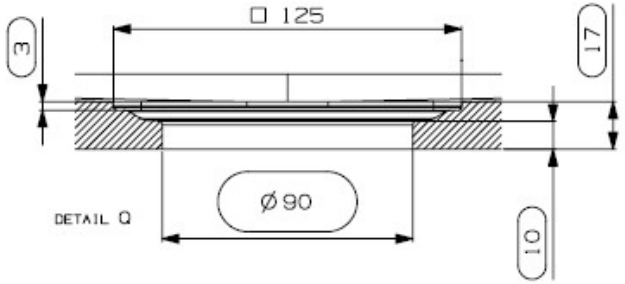

DOMUS LIVING

DOMUSTONE SHOWER FLOOR
MODEL: PIETRA WITH TILING LIPS
SIZE: 912X1216 3 SIDES
WEIGHT: 40,5 KG