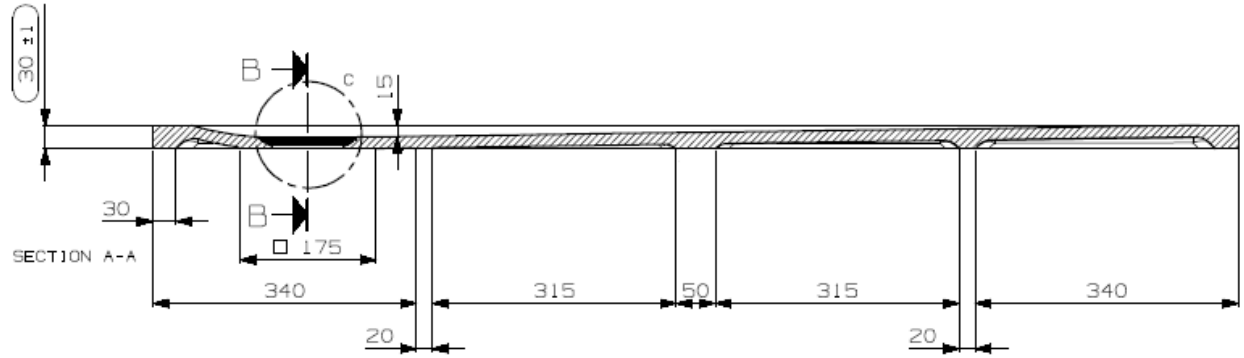

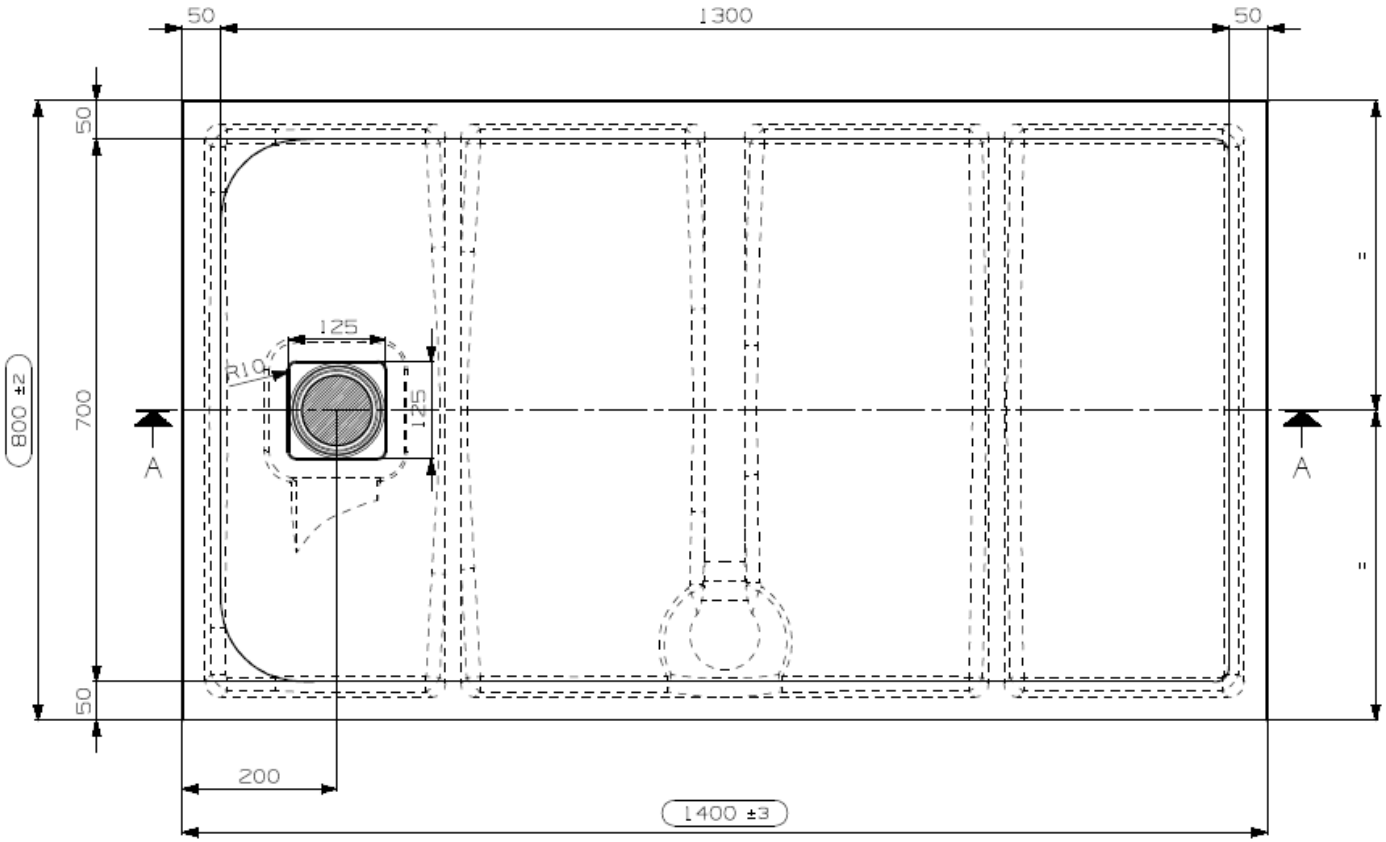

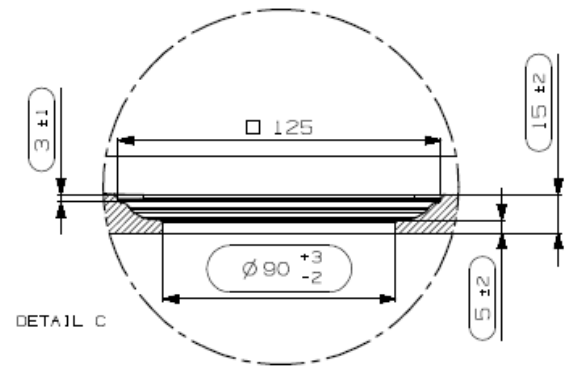

DOMUS LIVING

DOMUSTONE SHOWER TRAYS
MODEL: PIETRA
SIZE: 800X1400 mm
WEIGHT: 40.5 KG