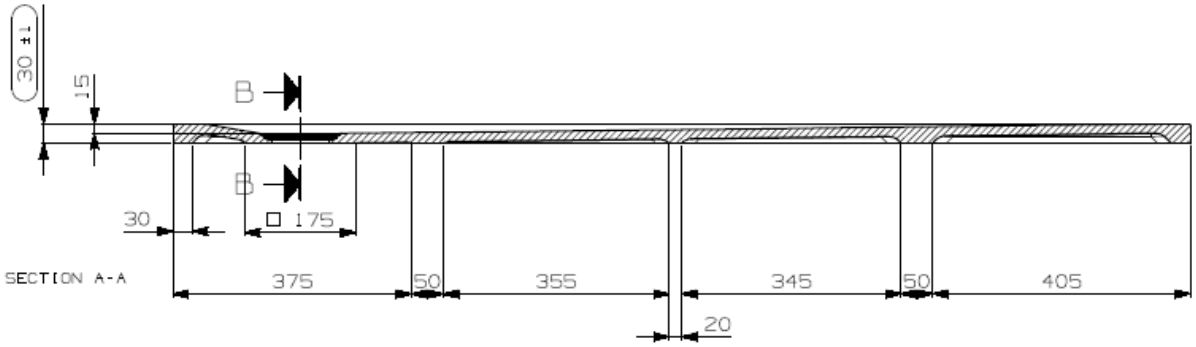

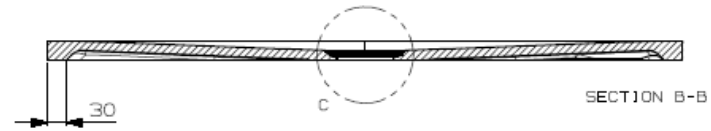

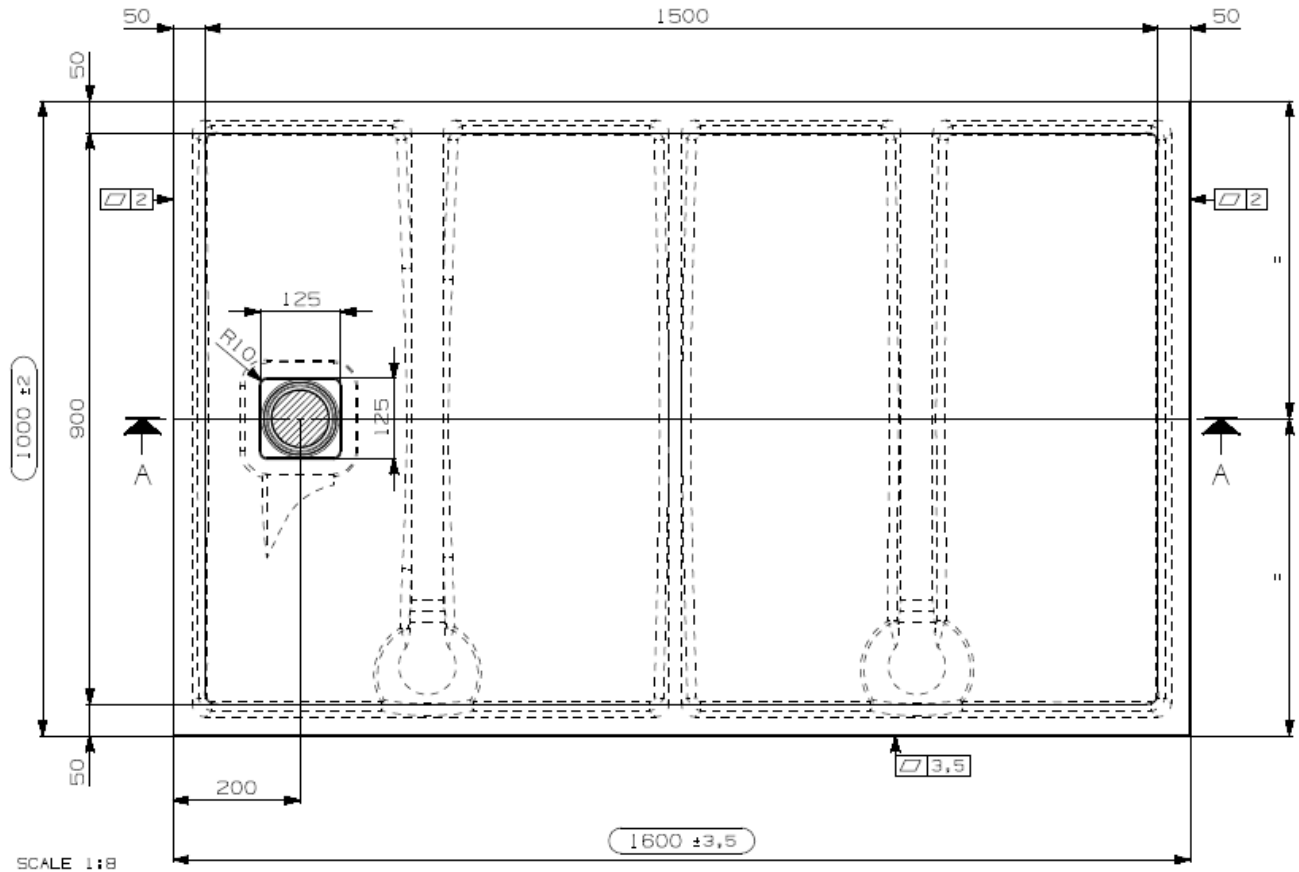

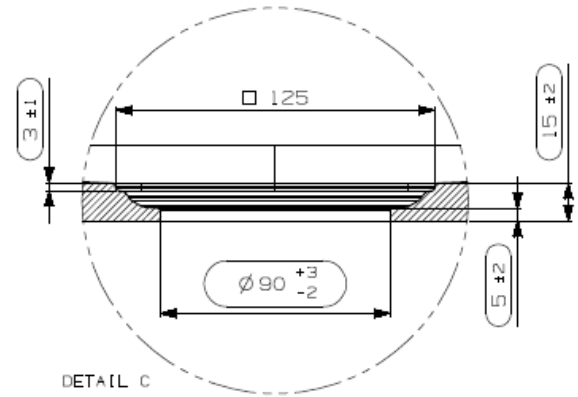

DOMUS LIVING

DOMUSTONE SHOWER TRAYS
MODEL: PIETRA
SIZE: 1000X1600 mm
WEIGHT: 56.5 KG