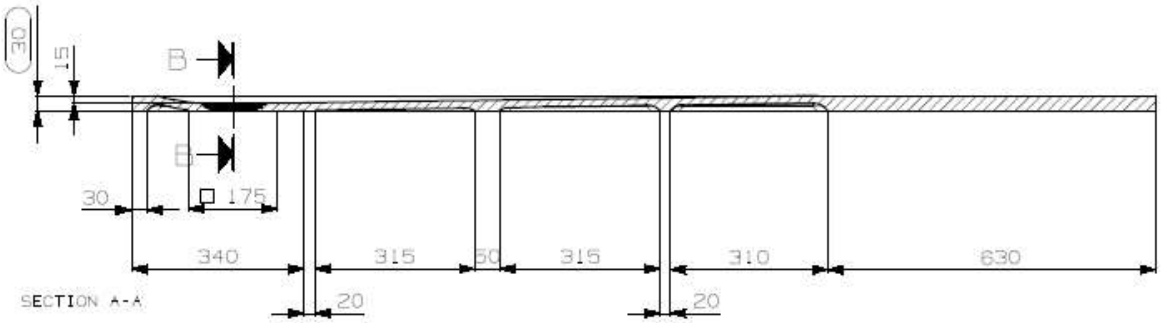

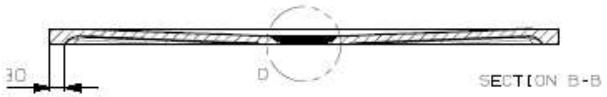

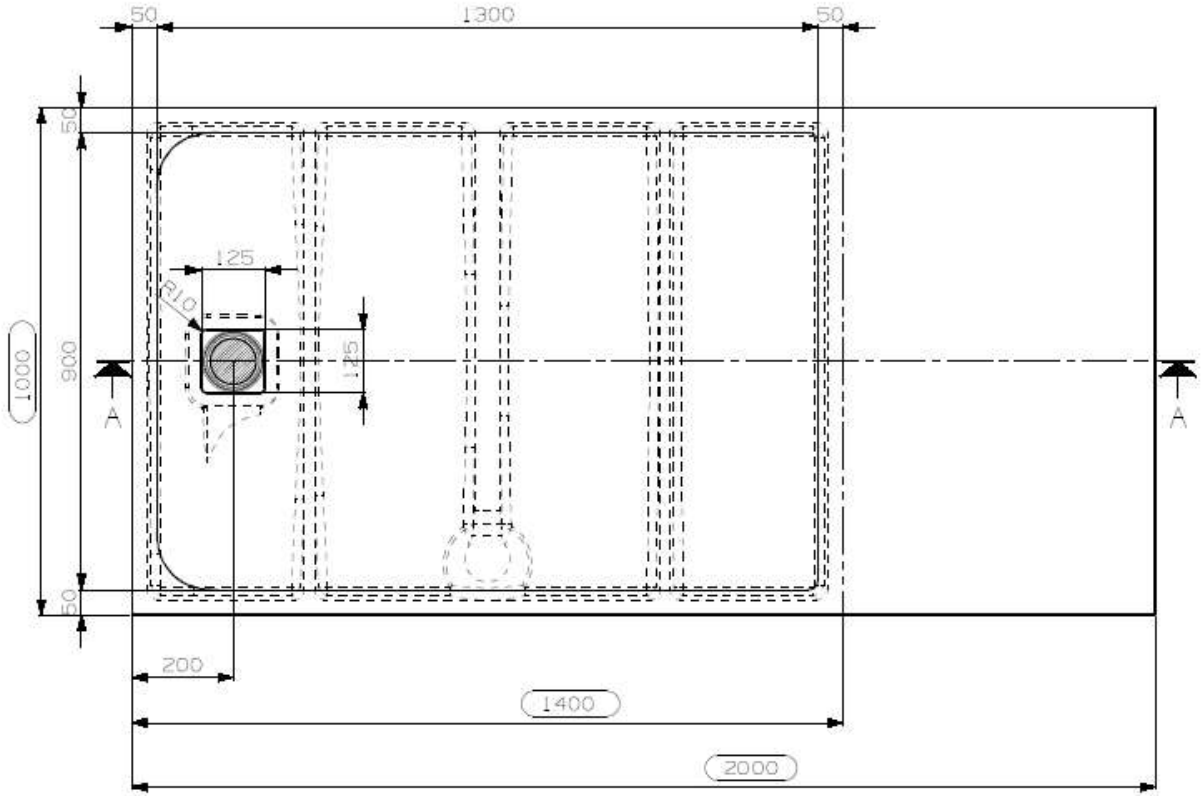

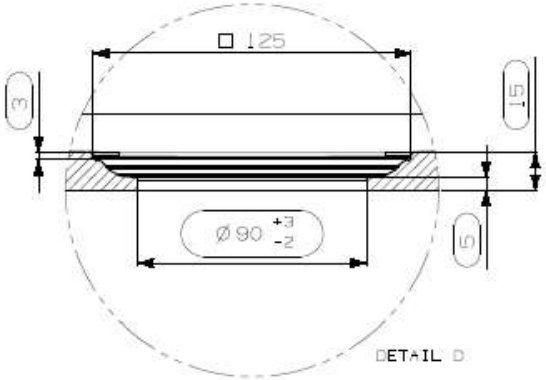

DOMUS LIVING

DOMUSTONE CUSTOM CUT SHOWER FLOORS
MODEL: PIETRA
MAX SIZE: 1000 X 2000
MIN SIZE: 1000 X 1400
WEIGHT: 85 KG